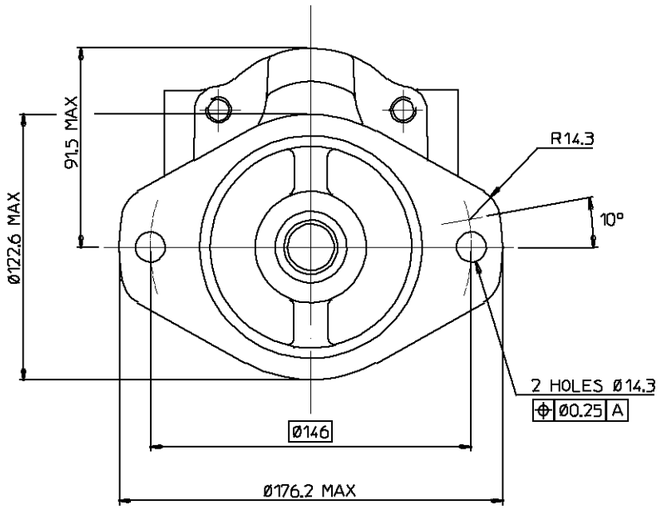

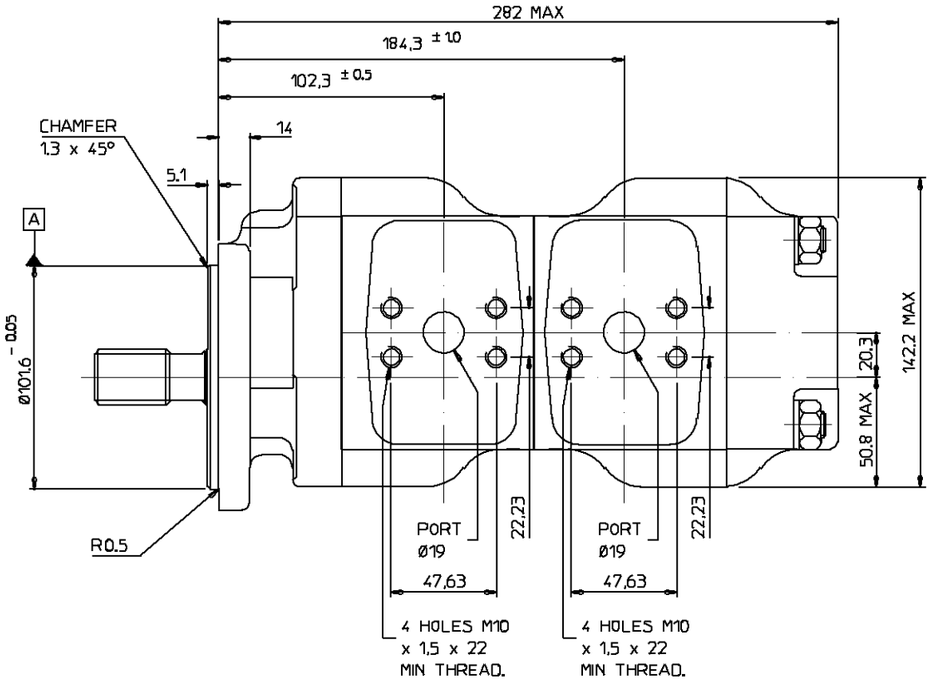

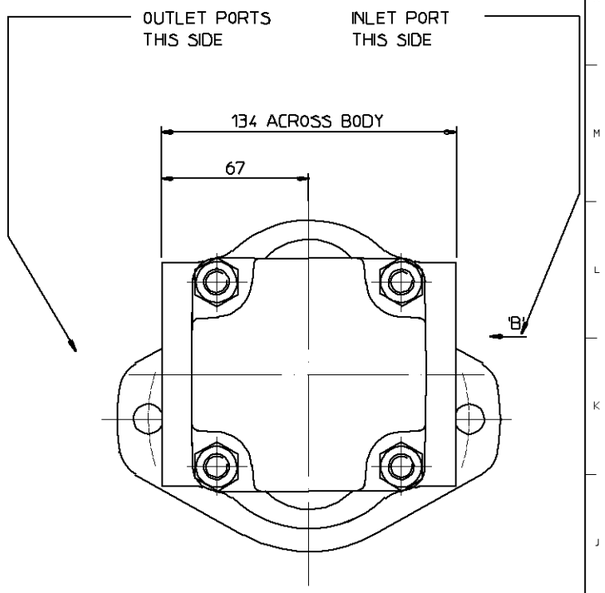

PUMP DATA		
	FRONT PUMP	REAR PUMP
PUMP TYPE	2PR037	2PR037
THEORETICAL DISPLACEMENT	37.0 cc/rev (2.26 cu in/rev)	37.0 cc/rev (2.26 cu in/rev)
MAXIMUM CONTINUOUS PRESSURE P1	250 bar (3625 psi)	220 bar (3190 psi)
MAXIMUM SPEED AT PRESSURE P1	3000 rev/min	
MINIMUM SPEED AT PRESSURE P1	500 rev/min	
ROTATION WHEN VIEWED ON END OF DRIVESHAFT	ANTI – CLOCKWISE	
APPROX WEIGHT	kg (lb)	
OPERATING TEMPERATURE RANGE	CONTINUOUS 0°C TO 80°C COLD START –20°C MAX INTERMITTENT 100°C	
SHAFT SEAL TYPE	SINGLE NITRILE	

FOR OPERATING CONDITIONS OUTSIDE THOSE STATED PLEASE CONSULT
ULTRA HYDRAULICS LIMITED TECHNICAL SALES DEPARTMENT.
WITH EXCEPTION OF DRIVESHAFT, FLANGE SPIGOT AND MOUNTING FACE, PLUS
AREAS AROUND PORTS, ALL SURFACES ARE PAINTED WITH BLACK SUNCORITE 528.

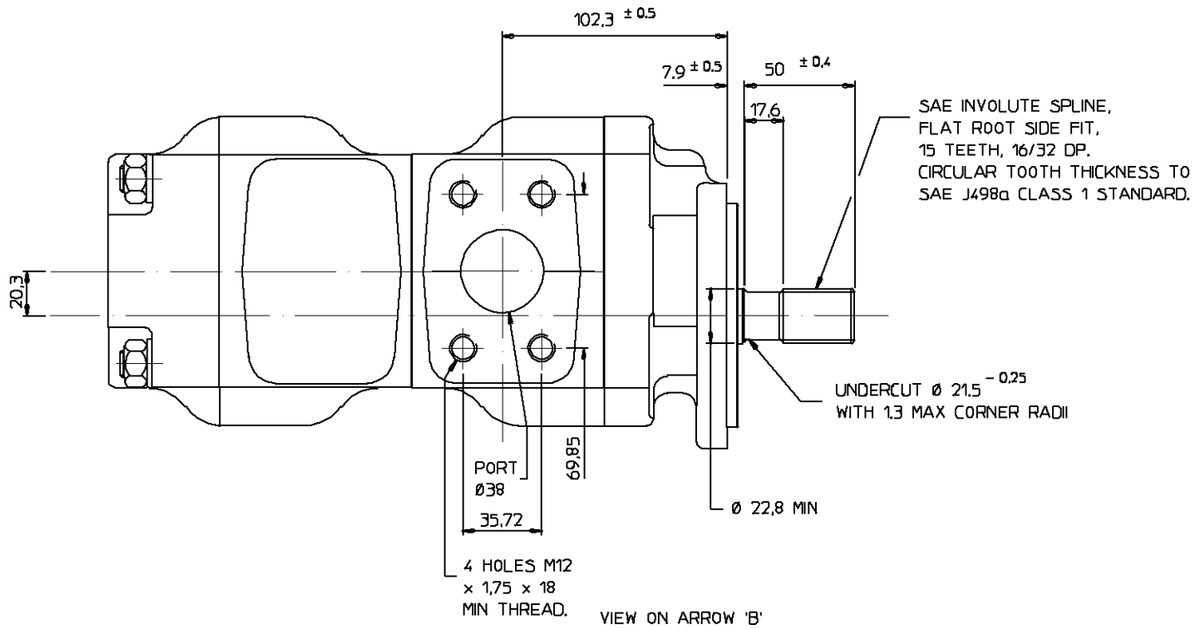

VIEW ON ARROW 'B'

ISSUE No.	1
ISSUED ON	58059
DRAWN	AM
DATE	1-Nov-00
CHECKED	AM
ENG APP.	AM
PROD APP.	——

USED ON PROJOD
UNIT No.
ASSY No.

Part No. 9 3 0 6 J

THIRD ANGLE PROJECTION

TITLE
2PR037M5D2B1B1–250–AN2S1N
2PR037C1D2B1B1–220

UNLESS OTHERWISE STATED
ALL DIMENSIONS IN MILLIMETRES / INCHES.
GENERAL MANUFACTURING STANDARDS TO HDS 200
GEOMETRIC TOLERANCES and SYMBOLS TO BS 308.

© ULTRA HYDRAULICS LTD 1999 THIS DRAWING IS THE PROPERTY OF ULTRA HYDRAULICS LIMITED AND IS CONFIDENTIAL. IT IS ISSUED SUBJECT TO THE CONDITIONS THAT :–
(1) INFORMATION OR ANY PART CONTAINED IN IT SHALL NOT BE DISCLOSED IN ANY FORM TO A THIRD PARTY.
(2) IT OR ANY PART OF IT SHALL NOT BE REPRODUCED IN ANY FORM

ULTRA HYDRAULICS LTD. CHELTENHAM

SIZE A0