[illegible]-100.100-[illegible]

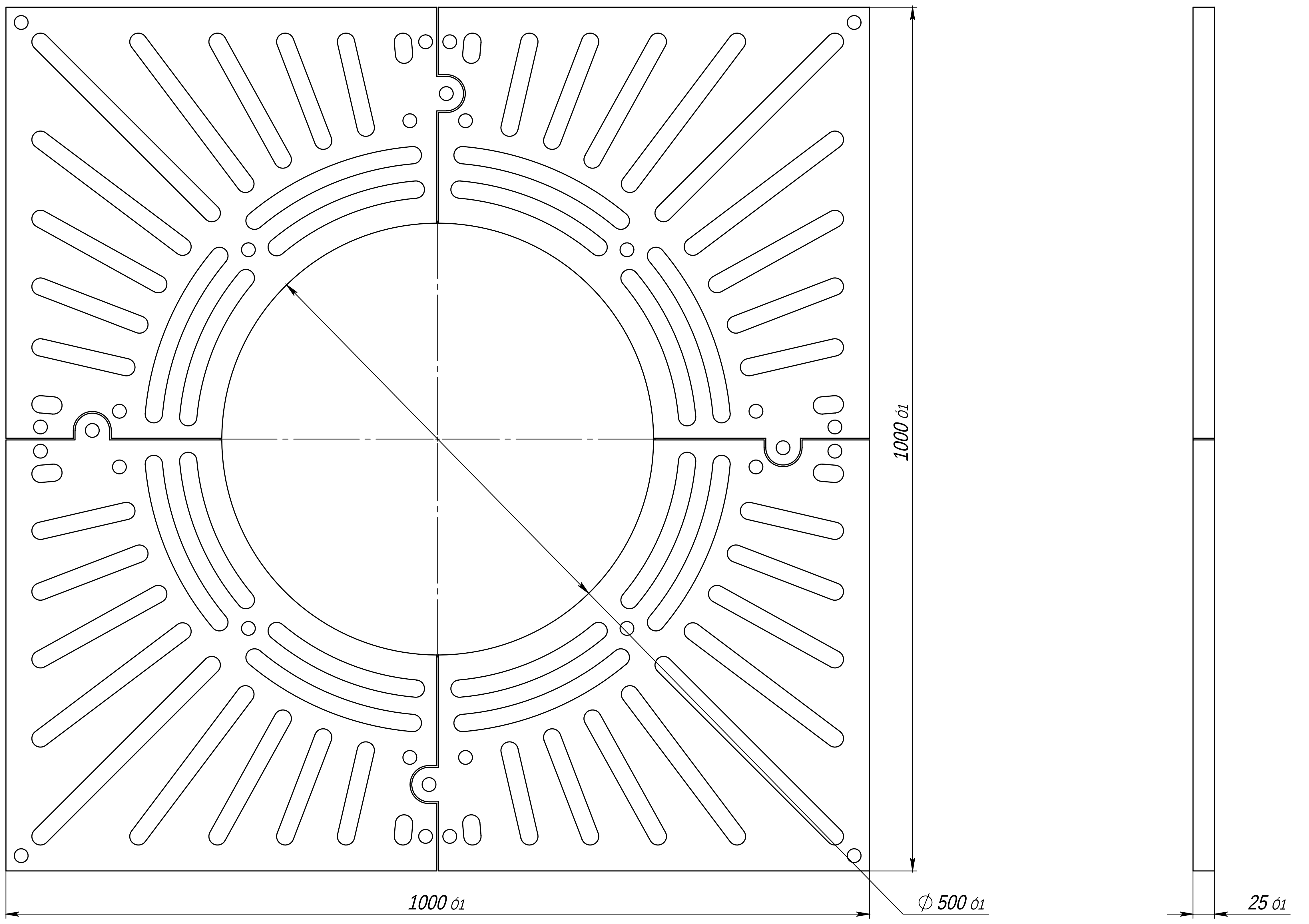
1000 ó1
1000 ó1
Ø 500 ó1
25 ó1

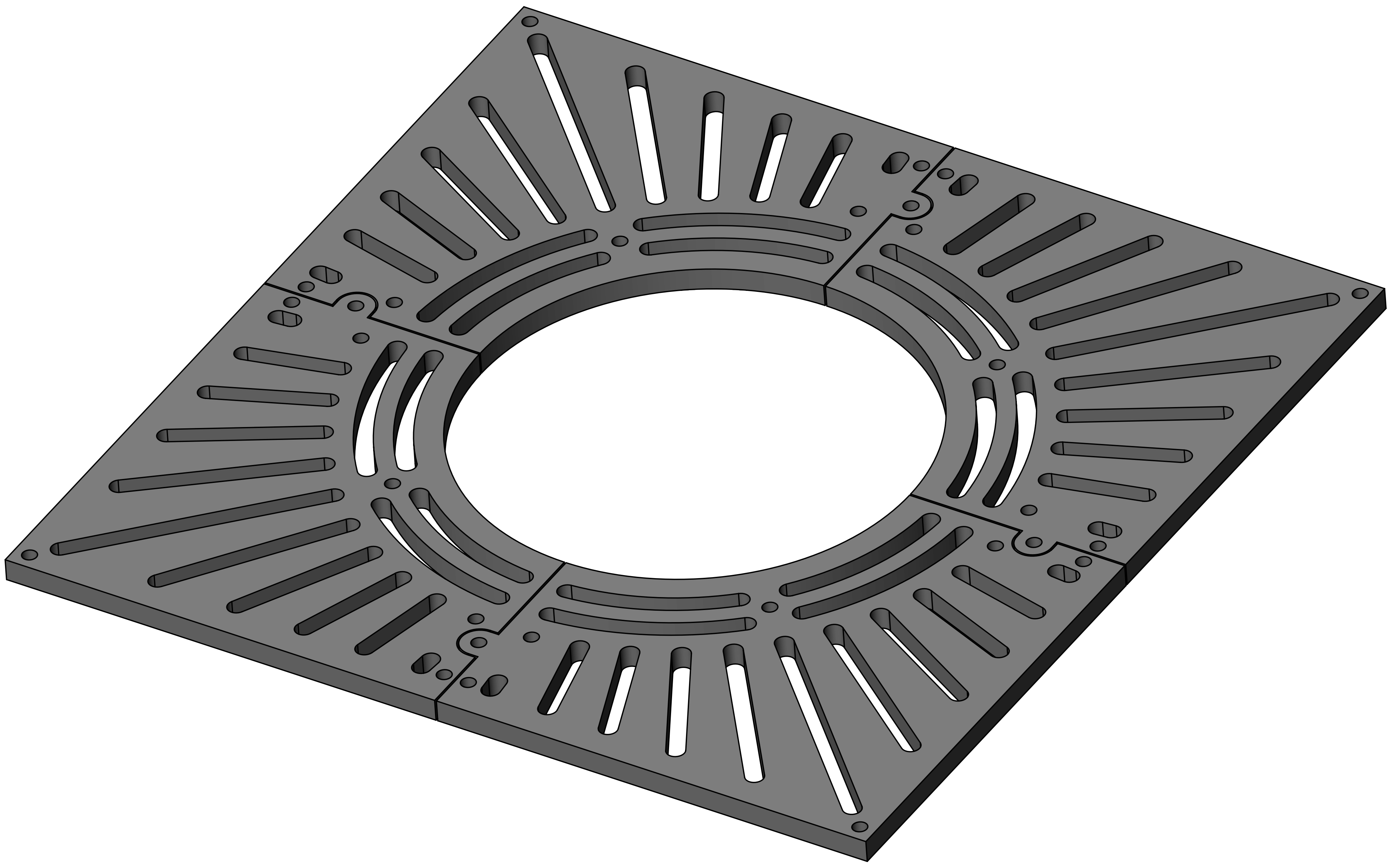

[illegible]. 37000	
[illegible]-100.100-[illegible]	
[illegible]	70
	1:5
	[illegible]: 1
[illegible] 20 [illegible] 1412-85	standartpark

[illegible] A2